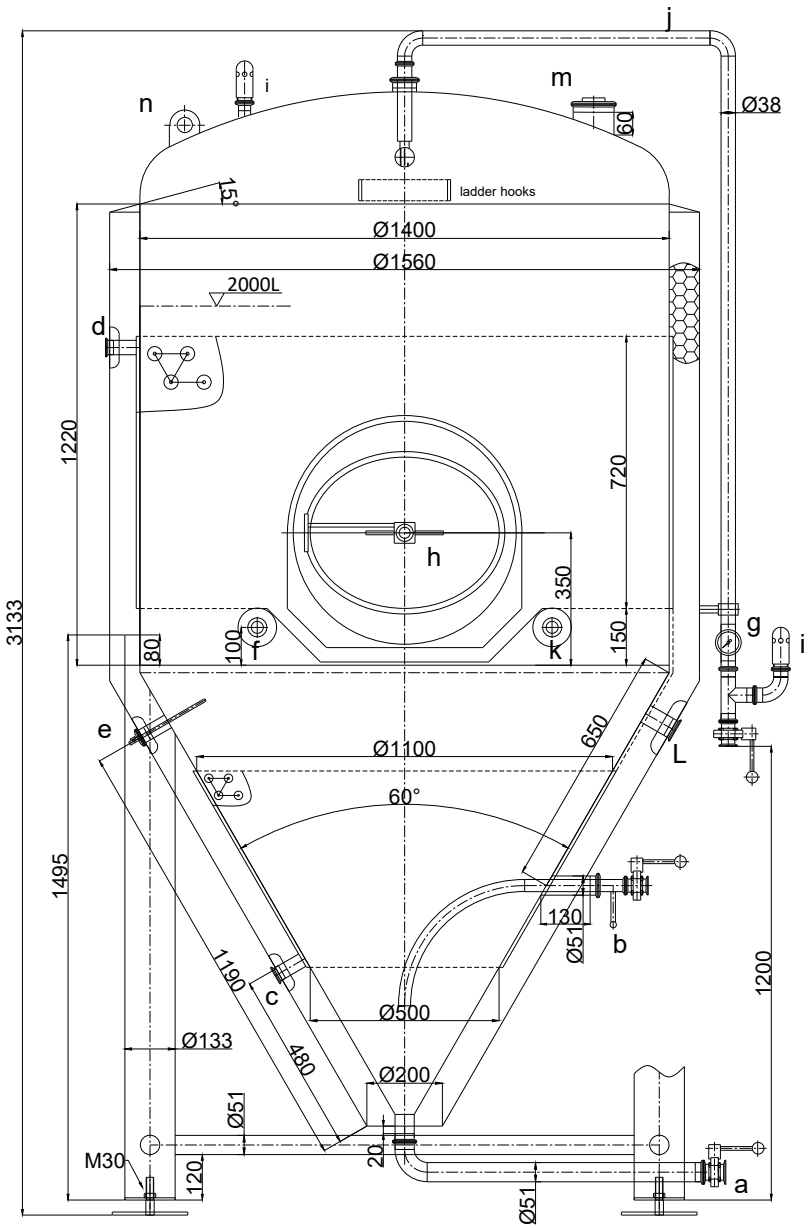

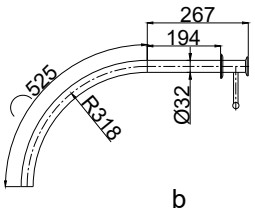

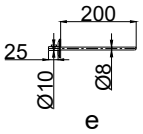

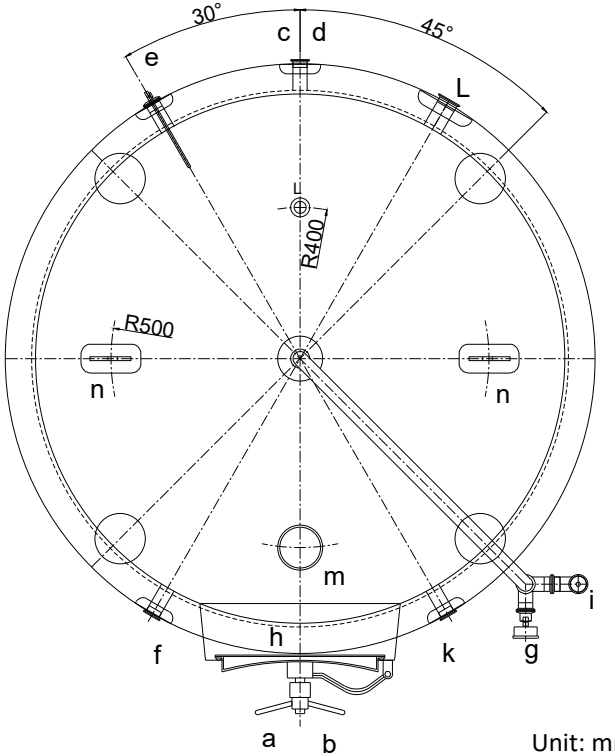

Unit: mm

Mark	Size	Face Type	Description
a	Ø51 / 2"	Tri-clover	Drain Outlet
b	Ø51 / 2"	Tri-clover	Beer outlet
c	Ø38 / 1.5"	Tri-clover	Glycol Inlet
d	Ø38 / 1.5"	Tri-clover	Glycol Outlet
e	Ø38 / 1.5"	Tri-clover	Thermowell Sensor
f	Ø38 / 1.5"	Tri-clover	Sampling Port
g	Ø38 / 1.5"	Tri-clover	Pressure Gauge
h	530x430	Weld	Manhole
i	Ø38 / 1.5"	Tri-clover	Pressure releif valve
j	Ø38 / 1.5"	Tri-clover	CIP Arm
k	Ø38 / 1.5"	Tri-clover	Thermometer
L	Ø51 / 2"	Tri-clover	Heating rod reserve port
m	Ø102 / 4"	Tri-clover	Dry hopping port
n			Lifting lug

Design parameter			
Parameter Name		Container	Jacket
Working Pressure	MPa	0.15	0.1
Design/Test Pressure	MPa	0.3	0.3
Working Temperature	°C	-7-80°C	
Design Temperature	°C	-10-100°C	
Medium		Beer	Glycol water
Material	SUS	304	304
Effective volume	L	2000	
Total volume	L	2500	

Project	KL01755-2000L Conical Fermenter (pressurisable, jacketed)	
Sku.	KL01755	
Company	KegLand Distribution PTY LTD	
Website	www.kegland.com.au	
Scale	1:20	